Godox 神牛

Mini Pioneer Series Studio Flash

小先锋闪光灯

Instruction Manual

使 用 说 明 书

250DI-300DI

Chinese English Bilingual | 中英文双语

705-250DY0-00

Made In China CE RoHS

前言

感谢您使用小先锋闪光灯，此闪光灯套装是为寻求物美价廉的影室设备的摄影师专门设计的。本品质量可靠，经久耐用，适用于人像，时尚，婚礼艺术，广告摄影，录像等的拍摄。

目录

01 前言
02 警告
02 注意事项
03 部件
03 • 机身
03 • 附件
03 使用
03 • 固定闪光灯
04 • 接通电源
04 • 功率调节
04 • 试闪按钮
04 • 同步触发
04 • 光控模式
04 • 造型灯使用
04 • 闪光灯管装卸
05 • 声音提示
05 产品参数
05 维护保养

⚠ 警告

在使用本设备前请仔细阅读以下警告内容，并妥善保管以便所有本产品使用者可随时参阅。

- ⚠ 请勿私自拆卸产品，如产品出现故障须由本公司或授权的维修人员进行检查维修。
- ⚠ 请保持干燥：请勿用湿手接触产品，亦不可将产品浸入水中或暴露于雨中。
- ⚠ 请勿让儿童接触本产品。
- ⚠ 摄影灯适用于通风的环境,使用时请保持灯光源部分及散热孔不被堵塞，请勿在易燃易爆的环境中使用。
- ⚠ 摄影灯采用电源插头做为断接装置，应保持随时便于操作。
- ⚠ 使用时严禁用手接触灯光发热部件。
- ⚠ 安装及连接附件时，请关闭开关断开电源并请佩戴绝缘手套。装卸闪光灯管/造型灯时，请确认灯管为冷却状态，避免烫伤，还需佩戴绝缘手套。
- ⚠ 请勿将闪光灯头正对人眼闪光(特别是婴儿的眼睛)，否则可能会在短时间造成视力障碍。
- ⚠ 在不使用时，请断开电源。

注意事项

1. 闪光灯在全功率的情况下连续引闪30次后，需冷却3分钟左右。如果连续使用而不冷却就会产生高温积热。
2. 不可长时间连续使用造型灯，否则可能造成安装在灯头上的柔光箱等易燃附件燃烧。有易燃附件时建议不要连续使用造型灯超过10分钟。如使用超过10分钟，请冷却1分钟后再继续使用。
3. 使用束光筒时，请勿长时间点亮造型灯或过频闪光(全功率每分钟不多于6次)。积热会导致闪光灯外壳受损或造成灯的损坏。
4. 避免突然的碰撞，防止闪光灯管或造型灯受损。

部件

- **机身**

（1） 电源插座
（2） 同步线插孔
（3） 电源开关
（4） 功率调节旋钮
（5） 充电指示灯
（6） 光控接收管
（7） 造型灯开关
（8） 光控模式开关
（9） 试闪按钮
（10）保险丝座
（11）托架
（12）伞孔

- **附件**

电源线
说明书

使用

- **固定闪光灯**
将闪光灯设备安装在一个合适的灯架上，调整好托架11并扭紧固定。伞孔(12)可以插上各类影楼伞。

- **接通电源**
  通过电源线接通交流电源与闪光灯，打开闪光灯上的电源开关(3)，此时充电指示灯(5)亮红色，表正在充电，不可以引闪；如果指示灯亮绿色，表示已经充满电，可以引闪。

- **功率调节**
  闪光功率通过功率调节旋钮(4)来控制，可以从“1/8”至“full”自由调节，满足客户在不同环境下对光源的要求。（注意：将功率从高至低调节时，需按下试闪按钮，释放电容能量，再次回电时闪光功率才对应档位功率。）

- **试闪按钮**
  欲使闪光灯测试闪光而不拍照，请按试闪按钮。摄影师可以通过试闪按钮结合功率调节旋钮(4)来调节闪光亮度。

- **同步触发**
  同步线插孔 (2) 规格为Φ3.5mm，此处可插入同步线或者触发器触发插头对闪光灯进行同步引闪。

- **光控模式**
  光控模式有3种选择：
  （1）没有光控模式：光控模式开关 (8) 拨至居中位置“OFF”，表示光控功能关掉。
  （2）1次引闪模式：光控模式开关(8)拨至向下位置“NOR”，表示闪光灯接收到1次外界闪光可以同步触发闪光。此模式可以做副灯使用，创造多种光影效果。
  （3）2次引闪（防预闪）模式：光控模式开关(8)拨至向上位置“PREF”，表示闪光灯在2秒内接收到2次外界闪光，接收到第2次时可以同步触发闪光。此模式可以做副灯使用，适用于TTL闪光环境。具有防预闪功能，适用带一次预闪功能的相机能用光控实现同步拍摄。

- **造型灯使用**
  造型灯开关(7)控制造型灯的打开和关闭：拨至靠左位置“O”表示造型灯关掉；拨至靠右位置“–”表示造型灯打开。造型灯的亮度可以通过功率调节旋钮(4)调节，闪光灯闪光时造型灯自动熄灭。
  注：不可长时间点亮造型灯，点亮5分钟后请冷却1分钟后再继续使用。

- **闪光灯管装卸**
  关闭所有电源，带上绝缘手套，将闪光灯管上的铁丝拧松，用平衡力拿住灯管两脚间，轻轻往外拉出卸下旧灯管。将旧灯管两脚上的套管取下套到新灯管两脚，拿住新灯管两脚间，对准灯头上两铜柱，用平衡力往里推进。最后将铁丝拧紧固定好灯管。

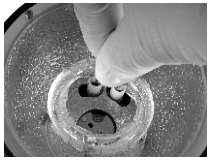

- 声音提示
  本机有蜂鸣提示功能，每次回电充满时会响“BI––”一声，提示可以引闪。

产品参数

型号	250DI	300DI
闪光能量	250WS	300WS
闪光指数 (m ISO100)	48	58
色温	5600 ± 200K	
电源电压 AC	AC110V-120V~60Hz或AC220V-240V~50Hz	
闪光功率调控	无级	
造型灯功率	75W（可调）	
回电时间	0.5-4秒(AC110V-120V~60Hz)/0.5-2秒(AC220V-240V~50Hz)	
闪光触发控制方式	同步线插孔，光控感应，试闪按钮	
闪光持续时间	1/2000–1/800s	
同步端口输出参数	5V	
保险丝	5A	5A(220V);8A(110V)
尺寸	235*180*108mm	
净重	约 1.145KG	

维护保养

- 闪光灯在工作时，如发现异常时，应立即关掉电源，查明原因。
- 灯体应避免震动，平时注意表面除尘。
- 灯体稍有发热为正常现象，无特别需要时，勿连续引闪。
- 所有闪光灯概由本厂指定可供原厂配件之维修部负责。
- 经发现擅自检修此闪光灯，将取消闪光灯之一年保修期，维修需要收取相关费用。
- 如果本品出现故障或者被水淋湿，唯有在专业人员维修后方可继续使用。
- 在维修和清洁本品时请断开电源。
- 如有技术更改，恕不另行通知。

Foreword

Thank you for purchasing Mini Pioneer Series Studio Flash. This device is designed for photographers seeking a high quality studio equipment at an affordable price. With its well-chosen key components and parts, the product is of high quality, stability and reliability for all portrait, fashion, wedding art, advertisement photography and video shooting etc.

Contents

06 Foreword
07 Warning
07 Caution
08 Names of Parts
08 • Body
08 • Accessories
09 Instructions for Use
09 • Flash Preparation
09 • Power Connection
09 • Flash Output Control
09 • Test Button
09 • Sync Triggering
09 • Slave Trigger Model
10 • Modeling Lamp
10 •Tube Replacement
10 • Buzz Function
11 Technical Data
11 Maintenance

Warning

To prevent damage to the product or injury to you or to others, read the following warnings in their entirety before using this device. Keep these safety instructions where users can read them for ready reference.

- Do not disassemble or modify. Should the product break down, send the defective back to the authorized service center for inspection and maintenance.
- Keep dry. Do not handle with wet hands, immerse in water, or expose to rain.
- Keep out of reach of children.
- Please put the device in a ventilation environment and keep the parts of lighting and heat dissipation holes are unobstructed. Do not use in flammable environment.
- As this product adopts make and break device, please keep it easy to be used.
- No touching the heating parts of this product.
- Please turn off the power and wear insulated gloves before installing and connecting accessories. When replacing the tube or modeling lamp, please make sure that the tube is cool and wear insulated gloves to prevent burns.
- Do not flash directly towards naked eyes (especially those of babies), otherwise it may lead to visual impairment.
- Disconnect from the power supply when it will not be used for an extended period.

Caution

1.After 30 continuous flashes at full power, the flash should be cooled down for about 3 minutes. Overheating will occur if it is used continuously without cooling down.

2.Do not keep using the modeling lamp for a long time; otherwise flammable accessories attaching to flash head, e.g. softbox will get burnt. A 10-minute time is recommended in this case. After 10 minutes, cool it down for 1 minute.
3.When using a snoot, do not keep the modeling lamp on for a long time or fire too frequently (not over six times for one minute). Overheating will result in damages for strobe housing and/or studio light.
4.Avoid sudden impacts as this can damage the flash tube and/or modeling lamp.

Names of Parts

- **Body**

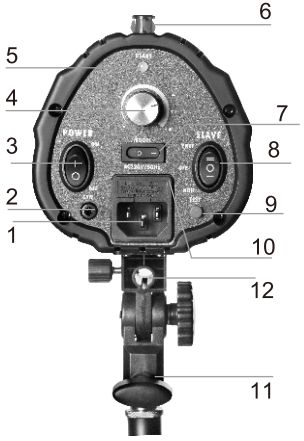

(1) Power Socket
(2) Sync Cord Jack
(3) Power Switch
(4) Flash Output Controller
(5) Charging LED Indicator
(6) Light Sensor
(7) Modeling Light Switch
(8) Optical Control and Anti-preflash Switch
(9) Test Button
(10) Power Fuse
(11) Mounting Bracket
(12) Umbrella Input

- **Accessories**

Power Cord
Instruction Manual

Instructions for Use

- **Flash Preparation**

Mount the flash unit on an appropriate light stand and adjust the mounting bracket (11). Make sure it's tightened and fixed. The umbrella input (12) is applicable for any studio umbrella.

- **Power Connection**

Connect the flash to an AC power source via power cord and turn the power switch (3) to ON position. The charging LED indicator (5) will grow red meaning the unit is charging, no flash at this moment. When the unit is ready to fire, the light will turn green.

- **Flash Output Control**

Flash output controller (4) controls the power radio, adjustable stepless power from 1/8 to full. It can satisfy the light requirements in different environment. (Note: When adjusting the power from full power to a lower setting, press the test button to release the power in the capacitor, so when recharged, the flash output will be in the corresponding setting.)

- **Test Button**

To fire the flash without taking a picture, push the test button. It will also adjust the brightness when combined with the flash output controller (4) .

- **Sync Triggering**

A sync cord (2) is provided with your flash unit, and the input is a Φ3.5 mm mini plug. When working with sync cord triggering method, insert one end of sync cord or a trigger plug into it; the flash then can be fired synchronously.

- **Slave Trigger Model**

Three choices available:

（1）No optical control: The optical control and anti-preflash switch (8) is set on the OFF position, meaning the slave trigger model is shut down.

（2）Once trigger model: The optical control and anti-preflash switch (8) is set on the NOR position, meaning the flash will be fired synchronously with one external flash. This model can act as an auxiliary lamp, offering various effects of light and shadow.

（3）Twice trigger model: The optical control and anti-preflash switch (8) is set on the PREE position, meaning the flash receives twice trigger in two seconds and will be fired synchronously. This model can act as an auxiliary lamp, applicable to TTL flash environment. And with anti-preflash function, it can work for the cameras equipped with once preflash model.

- **Modeling lamp**

  Modeling lamp switch (7) decides whether the modeling lamp is on or off: the switch set left (O position), it's off; the switch set right (I position), it's on. Brightness can be adjusted by flash output controller (4). It turns off automatically when the flash fires.

  NOTE: Do not keep long time in using the modeling lamp. It's better to be cooled down for 1 minute after 5 minutes continuous use.

- **Tube Replacement**

  Turn down the power before replacing the flash tube and wear insulated gloves. Then, loosen the iron wire on the tube, keep a balanced hold on the two feet of the flash tube and pull out the old tube gently. Take down the feet casing to put it on the new one. Hold two feet of the new tube, and target directly towards the two copper outlets, then push them slightly in. Tighten the iron wire to fix the flash tube.

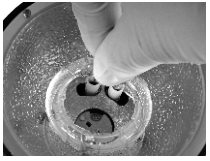

- **Buzz Function**

  The device is equipped with buzz function. It is turned on when the buzz switch (8) is set downwards, and then a "BI" sound will be heard when it is fully charged.

Technical Data

Model	250DI	300DI
Flash Output	250WS	300WS
Guide Number (m ISO 100)	48	58
Color Temperature	5600±200K	
Power Voltage	AC110V-120V~60Hz or AC220V-240V~50Hz	
Flash Power Control	stepless	
Modeling Lamp	75W（adjustable）	
Recharging Time	0.5-4 sec (AC110V-120V~60Hz)/0.5-2 sec (AC220-240V~50Hz)	
Flash Triggering Method	Sync cord, Test button, Slave	
Flash Duration	1/2000-1/800s	
Parameters Output from the Sync Cord Jack	5V	
Fuse	5A	5A(220V);8A(110V)
Dimension	235*180*108mm	
Weight	Approx 1.145KG	

Maintenance

- Shut down the device immediately when it works abnormally and find out the reason.
- Avoid sudden impacts and the lamp should be dedusted usually.
- It's normal for lamp being warm when in use. Avoid continuous flashes when it is not necessary.
- Maintenance of all the flashes is up to our authorized maintenance department which can provide original accessories.
- One year warranty period will be canceled when any unauthorized maintenance is found.
- If the product had failures or is wetted, it can be continuously used only after it is repaired by professionals.
- Disconnect the power when doing maintenance work or cleaning.
- New changes made to the specification may not be updated in this manual.